RST Roztocze
LOCKING SOLUTIONS

NEW

Hinge with constant torque

3.573.00X

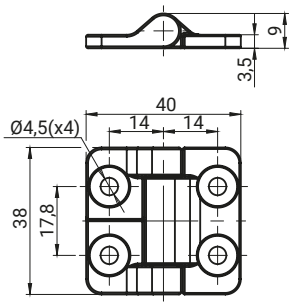

3.574.00X

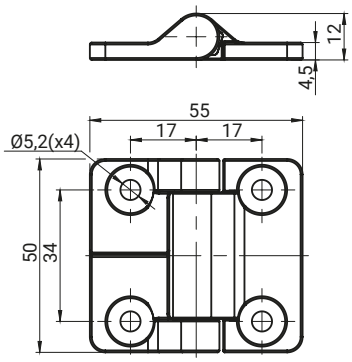

3.575.00X

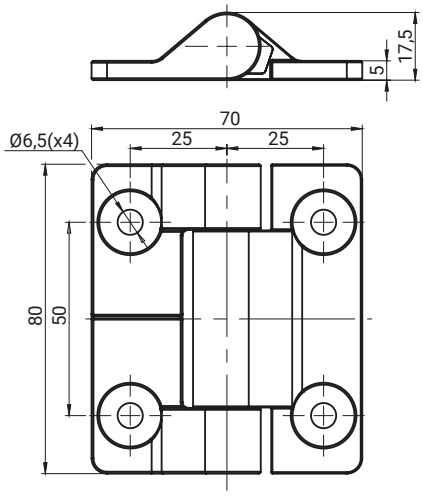

Example of hinge selection:
Opening angle: β = 120°
Door length: L = 0.5 m
Door weight: m = 1.5 kg
Acceleration due to gravity: g = 9.81 m / s2
Torque: M = 1.4 Nm
Number of hinges: n =?

Formula

$$M = \left(\frac{L * m * g * \sin \beta}{2}\right)$$

Result:
1.86 Nm = 2 HINGES

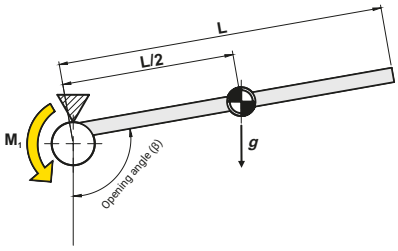

* Nominal torque deviation: ±20% at 10,000 cycles.

CATALOGUE NO.	TORQUE	CATALOGUE NO.	TORQUE	CATALOGUE NO.	TORQUE
3.573.001	0,9 Nm	**3.574.001**	1,8 Nm	**3.575.001**	2,5 Nm
				3.575.002	4 Nm
3.573.002	1,4 Nm	**3.574.002**	2,3 Nm	**3.575.003**	5 Nm
				3.575.004	7,5 Nm
3.573.003	1,8 Nm	**3.574.003**	3,4 Nm	**3.575.005**	9 Nm

COMPONENTS	MATERIAL	FINISH [C]	
		RAL9005	RAL7035
Base, Cover	ZAMAK 5	04	05

How to order:

3.573.00X — C

Catalogue number

Finish