Latch 3.ST272, 3.ST273

RST Roztocze® LOCKING SOLUTIONS

NEW stainless steel



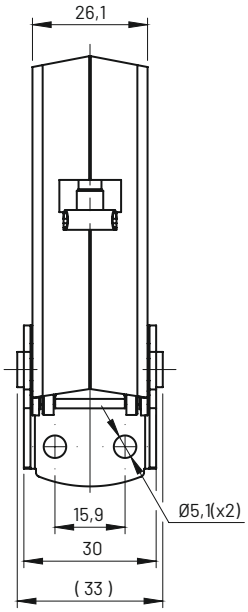

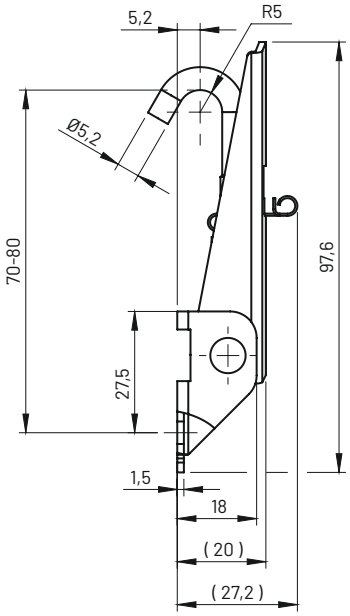

CATALOGUE NO.	MATERIAL
3.ST272.001	Stainless steel

NEW stainless steel



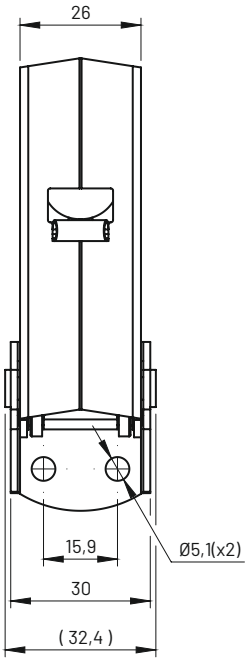

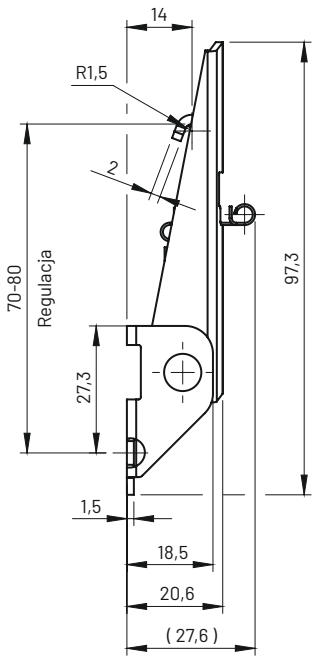

CATALOGUE NO.	MATERIAL
3.ST273.001	Stainless steel