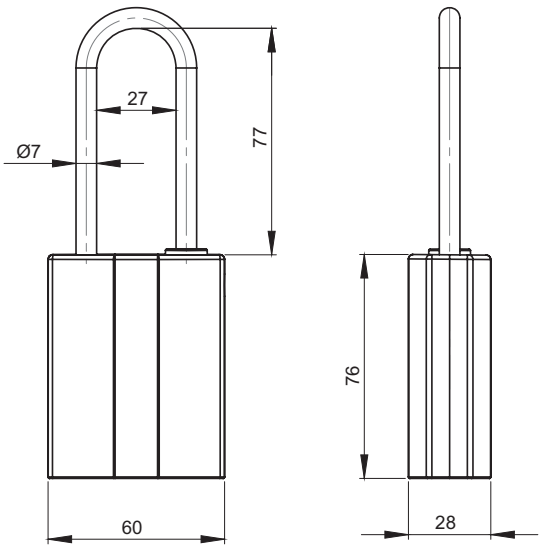

Insert
D13

CATALOGUE NUMBER	COMPONENTS	MATERIAL	FINISH [C]
			RAL9005
4.KDZN.100	Body	ZAMAK	04
	Shackle	Steel zinc plated	-

Paddlock is equiped with a special shaped insert type D13.

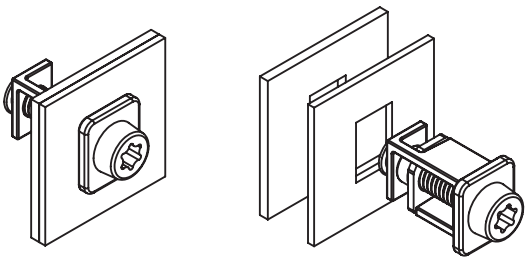

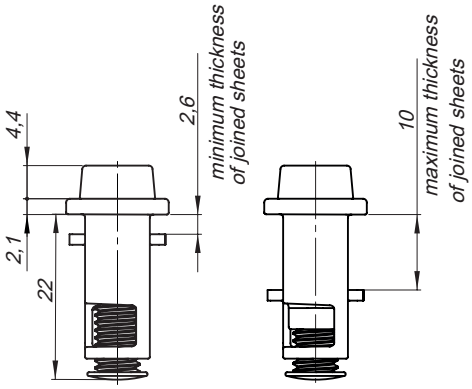

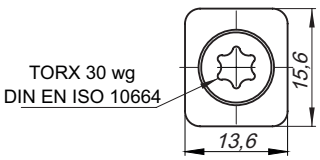

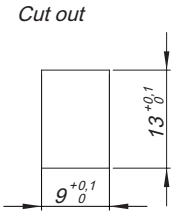

Conditions of use:
- minimum torque at first turn - 0,45 Nm
- minimum torque at fifth turn - 0,35 Nm

CATALOGUE NUMBER	COMPONENTS	MATERIAL
4.600.001	Body	Znal zinc plated
	Screw, Nut	Steel zinc plated