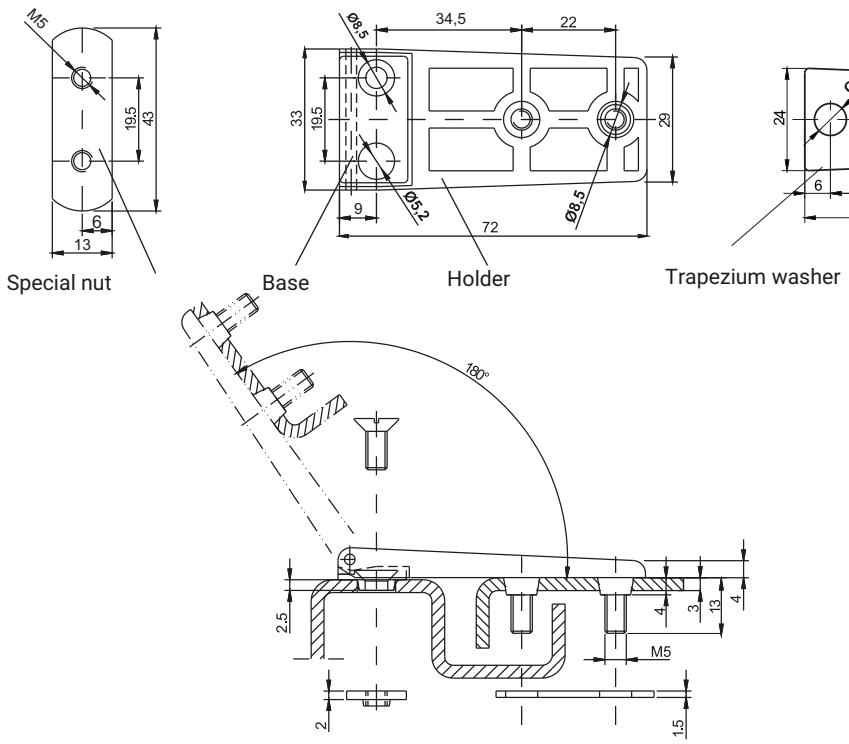

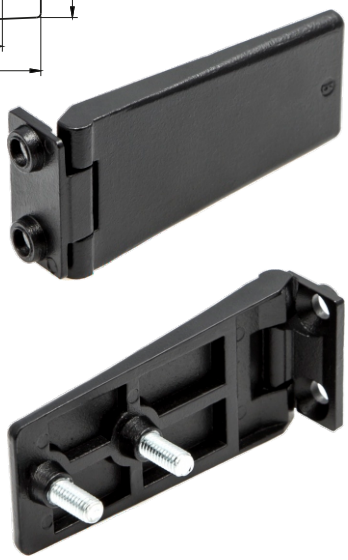

CATALOGUE NUMBER	COMPONENTS	MATERIAL	FINISH [C]	
			RAL 9005	RAL 7035
3.ZN3.001	Holder, Base,	ZAMAK 5	04	05
	Pin	Brass		
	Washer, nut	Steel zinc plated		

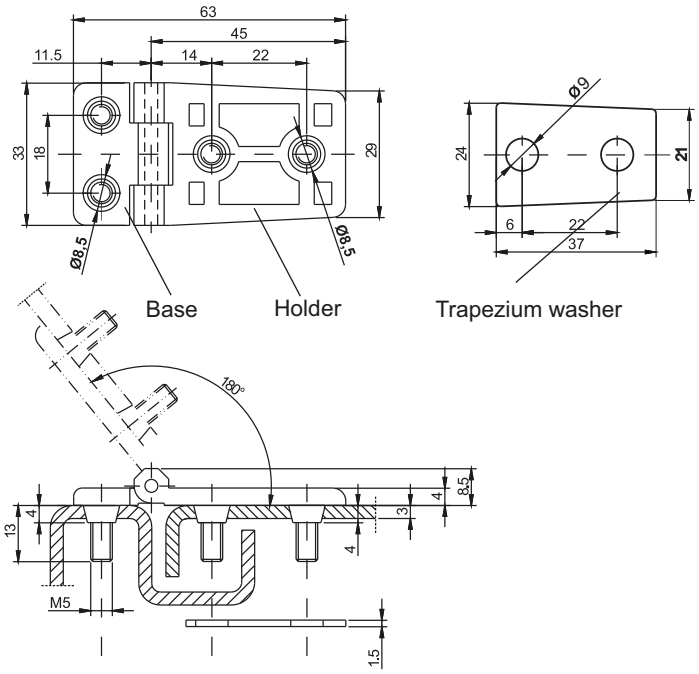

CATALOGUE NUMBER	COMPONENTS	MATERIAL	FINISH [C]	
			RAL 9005	RAL 7035
3.ZN4.001	Holder, Base,	ZAMAK 5	04	05
	Pin Washer	Steel zinc plated		

How to order: 3.ZN3.001 — C

Catalogue number

Finish