Hinge 3.ZN140

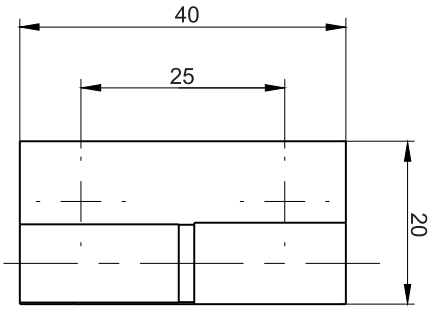

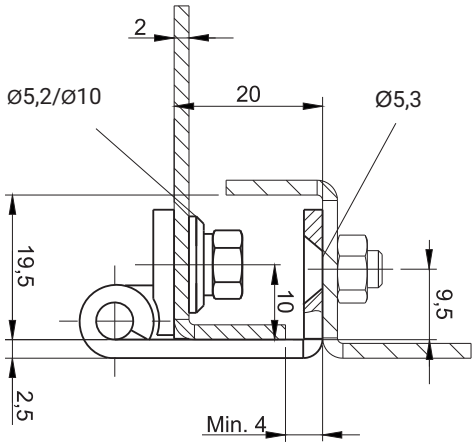

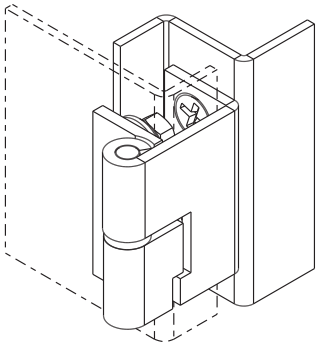

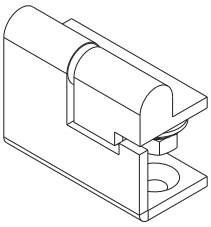

3.ZN140.001
RIGHT VERSION

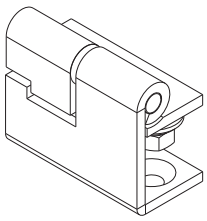

3.ZN140.002
LEFT VERSION

CATALOGUE NUMBER	COMPONENTS	MATERIAL	FINISH [C]	
			RAL 9005	RAL 7035
3.ZN140.001	Holder	Brass	04	05
	Base	Steel zinc plated		
	Pin	Steel zinc plated		
3.ZN140.001SN	Holder, Base, Pin	Stainless steel	-	-
3.ZN140.002	Holder	Brass	04	05
	Base	Steel zinc plated		
	Pin	Steel zinc plated		
3.ZN140.002SN	Holder, Base, Pin	Stainless steel	-	-

How to order: 3.ZN140.001 — C
Catalogue number
Finish