Screw clamps v-klema type
Single aluminium

ROZTOCZE

25-120SW

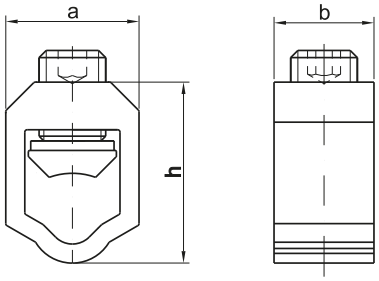

35-240SW
50-240SW
35-240SW-C
50-240SW-C

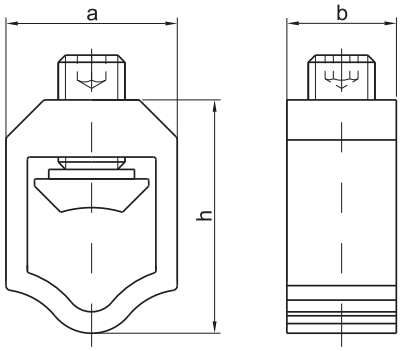

70-300SW
95-300SW

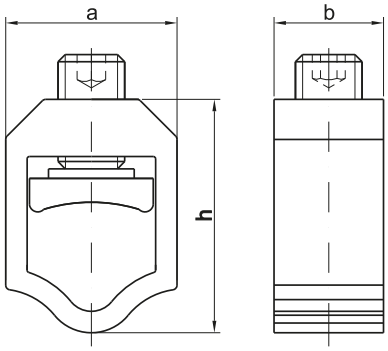

25-120SW-B
50-300SW-B
95-300SW-B

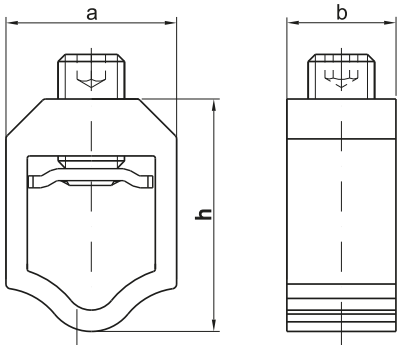

sm - multiwire sector shaped conductor (flexible)
rm - round multiwire conductor (flexible)
se - sector shaped conductor (rigid)
re - round conductor (rigid)

DETAIL	CROSS-SECTION [mm²]				NOMINAL CROSS-SECTION [mm²]	TIGHTENING TORGUE [Nm]	DIMENSIONS		
	sm	se	rm	re			a	b	h
25-120SW	25-120	25-120	16-95	16-95	95	20	28	18,5	38
35-240SW	35-185	35-240	25-150	25-95	120	30	35	23	49
50-240SW	50-185	50-240	35-95	35-120	120	30	35	23	49
70-300SW	70-240	95-300	50-120	70-150	150	30	35	23	49
95-300SW	70-240	95-300	50-185	70-240	150	30	37,5	23	54
25-120SW-B	25-120	25-120	16-95	16-120	95	20	28	18,5	38
50-300SW-B*	50-240	50-300	35-240	35-240	150	35	35	23	49
95-300SW-B	50-300	50-300	50-300	50-150	150	30	37,5	23	54
35-240SW-C	35-240	35-240	35-95	35-120	150	40	35	23,2	49
50-240SW-C	50-240	50-240	35-95	35-120	150	40	35	23,2	49

	25-120SW	35-240SW	50-240SW	70-240SW	95-300SW	25-120SW-B	50-300SW-B	95-300SW-B	35-240SW-C	50-240SW-C
clamp	brass - tin plated					spring steel zinc-plated			nickel-plated zinc-alloy	
housing	aluminium (AlMgSi)									
screw	steel zinc-plated									

SW - hexagon head socked
Screw clamps have safety sign 'B' Wg PN-EN 60947-7-1, (IEC 60947-7-1), EN 61238, EN 60999
* EN 60947-7-1, EN 60947-7-2