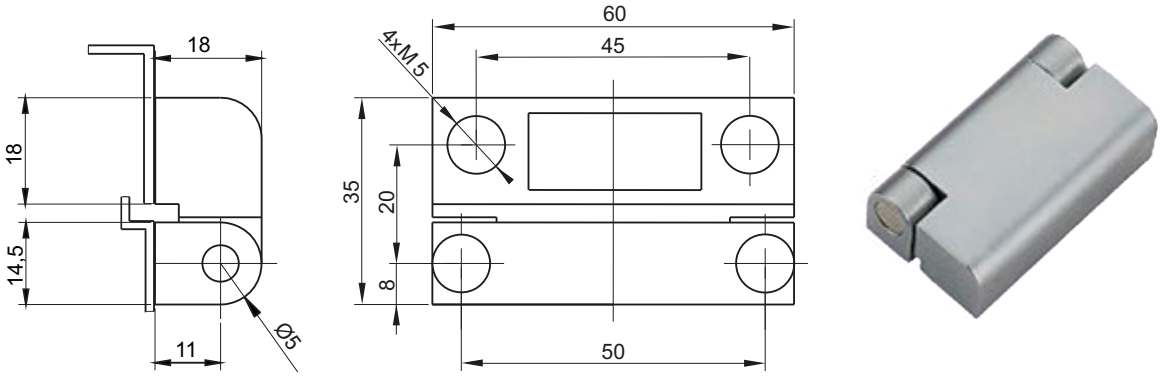

CATALOGUE NUMBER	COMPONENTS	MATERIAL	FINISH [C]
			RAL9005
3.517.001	Holder, Base	ZAMAK 5	04
	Pin	Steel zinc plated	-

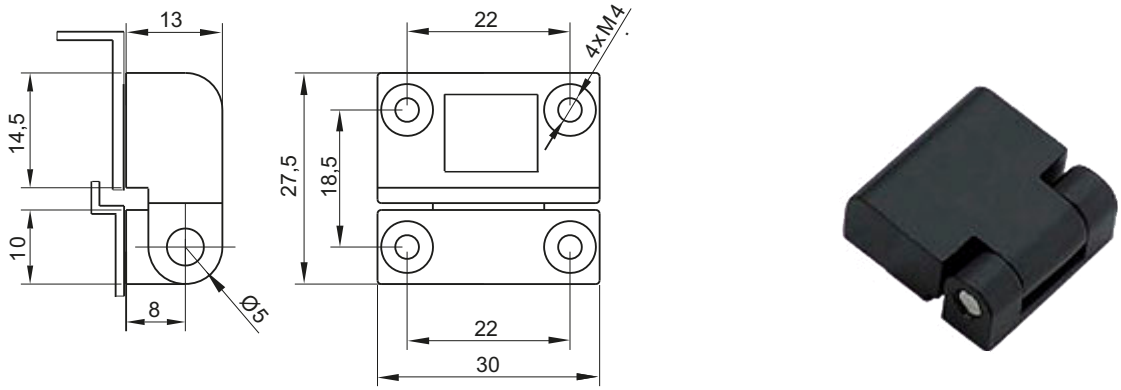

CATALOGUE NUMBER	COMPONENTS	MATERIAL	FINISH [C]	
			Nickel	RAL9005
3.517.002	Holder, Base	ZAMAK 5	02	04
	Pin	Steel zinc plated	-	-

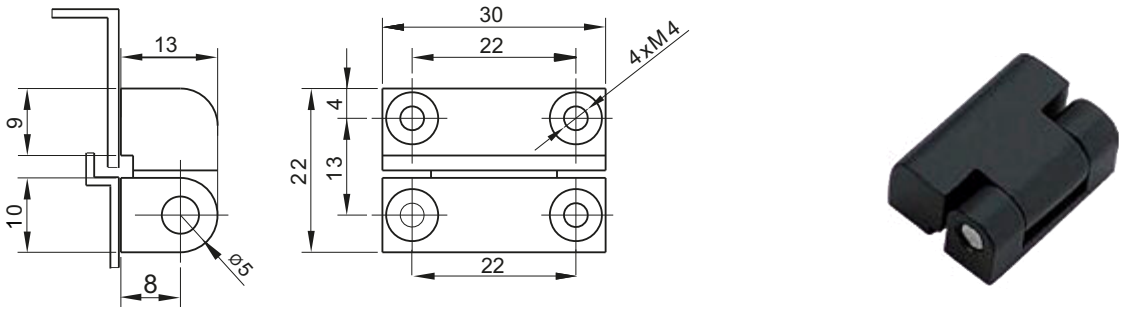

CATALOGUE NUMBER	COMPONENTS	MATERIAL	FINISH [C]	
			Nickel	RAL9005
3.517.003	Holder, Base	ZAMAK 5	02	04
	Pin	Steel zinc plated	-	-

How to order:

3.517.001 — C

Catalogue number

Finish